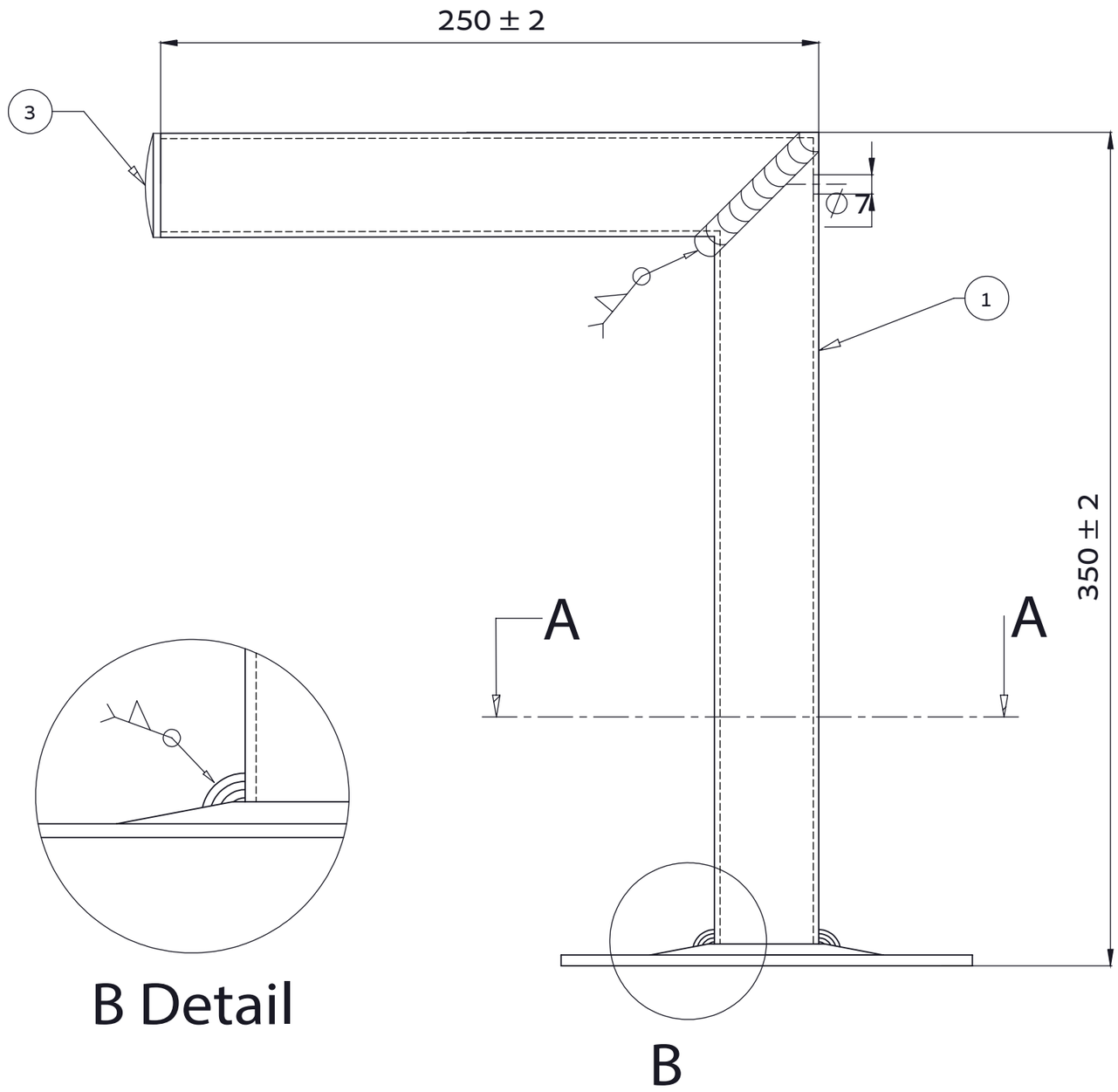

B Detail

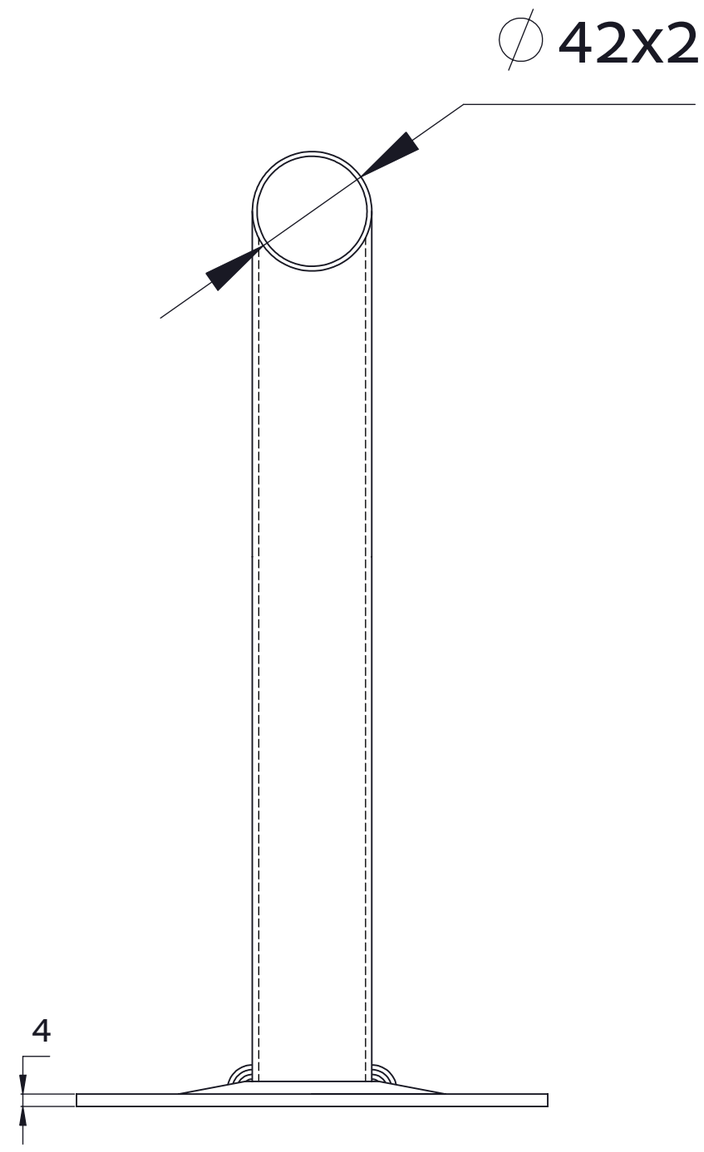

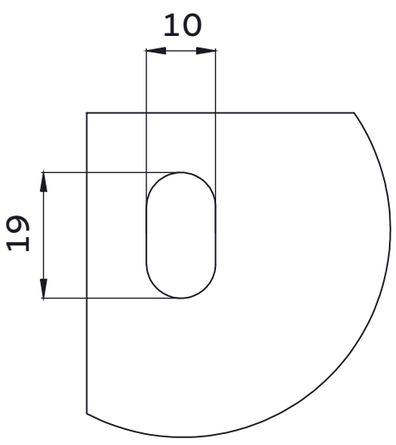

C Detail

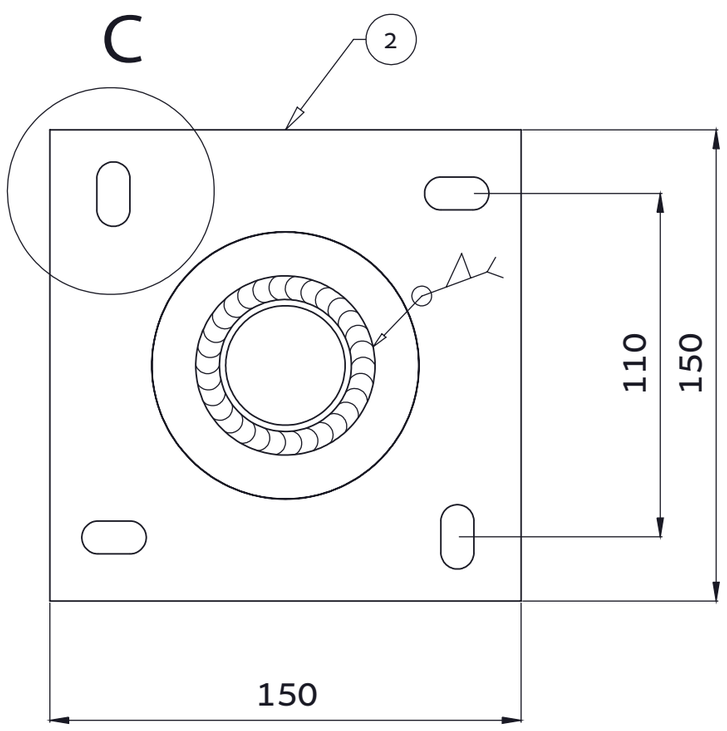
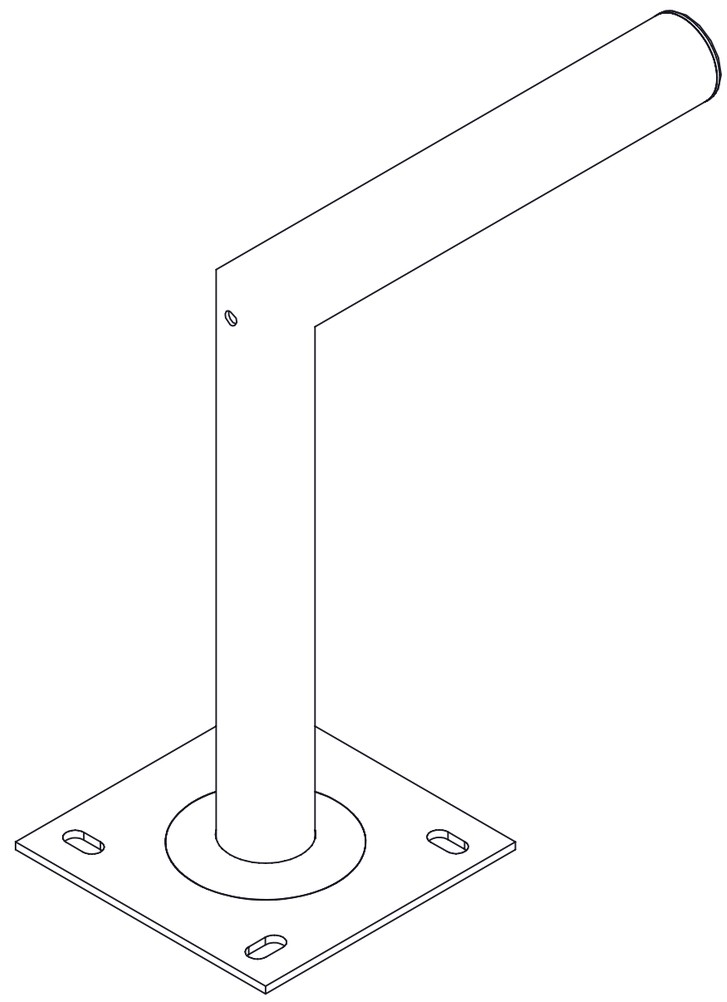
A-A Cross Section